Power Conversion®

XC Portable Air Conditioning

XC-14A, XC-22A, XC-30A Models

User & Installation Manual

www.xpcc.com | © 2015 Xtreme Power Conversion Corporation. All rights reserved. (Rev 1/26/15)

Table of Contents

Introduction.....5

Product Description.....5

Assembly.....6

Component Parts.....6

Power Cord Holder.....7

Rubber Stoppers.....7

Discharge Ducts / Supply Air Duct.....8

Installation Guide.....8

Moving the Unit..... 8

Plugging in the Unit.....8

Operation.....9

Control Panel.....9

Maintenance.....10

Filter Cleaning.....10

Spring Replacement.....11

Troubleshooting.....11

Alarm Codes.....12

Troubleshooting Chart.....13

Specifications.....14

Shipping List..... 14

Options.....14

Obtaining Service.....15

Xtreme Power Conversion Limited Warranty.....16

Thank you for selecting this Xtreme Cooling unit. It provides you with spot cooling for large areas where cooling of an entire area is not practical or possible. **Please read this manual** before installing the XC-14A, XC-22A, or XC-30A as it provides important information that should be followed during installation and maintenance of the Portable Air Conditioner, allowing you to correctly set up your system for the maximum safety and performance. Included is information on customer support and service, if it is required. If you experience a problem with the UPS, please refer to the Troubleshooting section in this manual to correct the problem. If the problem is not corrected, please collect information so that the Technical Support personnel can more effectively assist you.

IMPORTANT SAFETY INSTRUCTIONS: (SAVE THESE INSTRUCTIONS)

Please read this manual carefully for instructions on correct installation and usage. Please read all safety instructions.

1. Transport and store the unit in an upright position only. Leave the unit in an upright position for at least 3 hours before use.
2. Always place the unit on an even, level surface.
3. Ensure the unit is connected to a grounded utility of the correct rating / capacity.
4. The unit will cool when the room temperature is between 64.4°F - 113°F (18°C - 45°C) depending on the thermostat setting.
5. DO NOT use this unit for functions other than those described in this User's Manual.
6. DO NOT tilt the unit.
7. DO NOT cover or obstruct the unit's inlet and/or outlet grilles.
8. DO NOT use the unit in areas where it will be exposed to rain or water.
9. NEVER unplug the unit while it is operating.

WARNING! DO NOT use the unit in wet environments, such as a laundry room, to avoid risk of electrical shock.

10. DO NOT place any foreign objects on the unit.
11. DO NOT operate the unit with wet or damp hands.
12. DO NOT allow chemical substances to come in contact with the unit.
13. DO NOT operate the unit in the presence of flammable substances or vapors such as alcohols, pesticides, gasoline, etc.

WARNING! DO NOT operate the unit in explosive or flammable environments.

14. DO NOT use the plug to start or to stop the unit. Always use the control panel to start and to stop the unit.
15. Always turn off the unit when it is not in use, and unplug the power plug from the electrical outlet.
16. Always turn the unit off and unplug the main power plug from the electrical outlet before cleaning, moving, or performing maintenance.
17. AVOID the use of adapter plugs or extension cords. If it is necessary to use an extension cord or an adapter plug to operate the unit, ensure that they are correctly rated for the application. Consult local qualified electrician and all local electrical codes to ensure proper setup. Any extension cord used with the device must be rated for a minimum of 15A.
18. DO NOT unplug the unit by pulling on the electrical cord. Keep the electrical code away from heat sources and always completely unroll the cord to avoid overheating. If the power cord becomes damaged, a qualified service agent, qualified electrician, or similarly qualified person must replace it, in order to avoid a hazard or shock.

WARNING! DO NOT operate a unit with a damaged power cord.

19. The filters must be used with the product at all times. When the filters are removed for cleaning, always ensure that the unit has been turned off and unplugged from the electrical outlet.
20. Regularly clean the filters to maintain efficiency. If the filters are not cleaned regularly, the units output performance and efficiency will decline and energy consumption will increase.
21. DO NOT operate the unit with a damaged power cord or plug, after it malfunctions, or if the unit has been dropped or damaged.
22. Only use the unit in the upright position on a even, flat surface. Unit must be positioned at least 24 inches (60 cm) from the nearest object in any direction.
23. Stop operation immediately if abnormal noise or odor is noticed. Contact local service center.

Introduction

The information provided in this manual covers 13,200 – 29,000 BTU/HR Xtreme Cooling units, their basic functions, operating procedures, options available and emergency situations. It also includes information on how to ship, store, handle, and install the equipment. Only detailed requirements of the Cooling units are described herein, and installation must be carried out in accordance with this manual. Electrical installation must also carefully follow local legislation and regulations. Only qualified personnel should conduct these installations as failure to acknowledge electrical hazards could prove to be fatal.

Product Description

Xtreme Cooling Portable Air Conditioners feature spot cooling for large areas where cooling of the entire area is not practical or possible. A dedicated spot cooling thermostat controls the unit in this application. These air conditioners can also be used in smaller areas for room cooling.

A control panel provides ease of use and contains self-diagnostic functions and displays, showing operating modes, room and set temperatures, and faults. If an abnormal operation occurs, a visual display of the fault is shown.

Caster wheels are included for ease of portability.
Suitable applications include: factory or work place, industrial kitchen, computer room, emergency cooling, outdoor event, etc.

Assembly

Component Parts

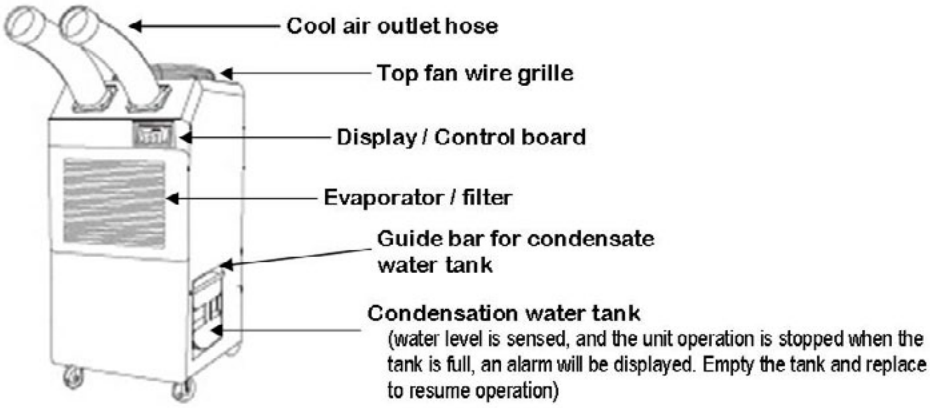

Front and Right Side View

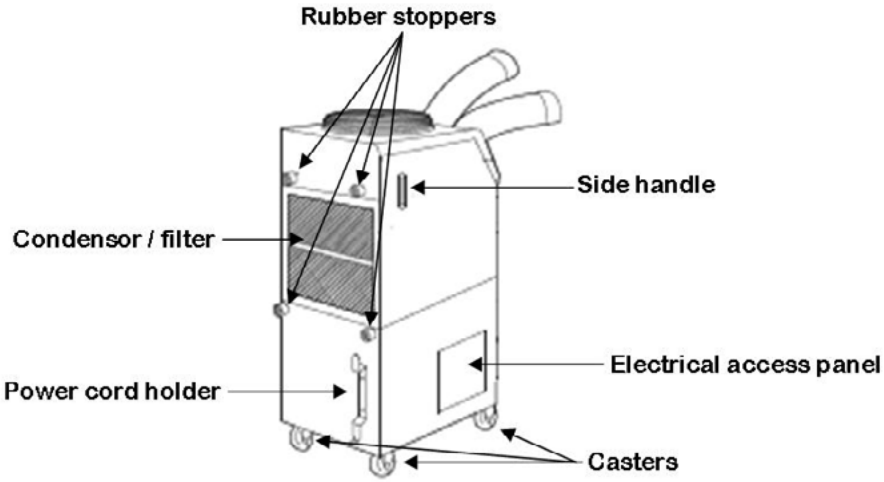

Rear and Left Side View

Power Cord Holder

1. Remove the Power Cord Holder from the accessory box
2. Place the Power Cord Holder on the rear of the unit as shown below
3. Use screws to install the Power Cord Holder to the rear of the unit (screws inside the accessory box)

Power Cord Holder attachment

Rubber Stoppers

1. Remove the Rubber Stoppers from the accessory box
2. Place the Rubber Stoppers on the rear of the unit as shown below
3. Use screws to install the Rubber Stoppers to the rear of the unit (screws inside the accessory box)

Rubber Stopper attachment

Discharge Ducts / Supply Air Duct

1. Remove the Cool Air Outlet Hose(s) from the box
2. Place the Cool Air Outlet Hose(s) on the front top of the unit as shown below
3. Use screws to install the Cool Air Outlet Hose(s) to the front of the unit (screws inside the accessory box)

Cool Air Outlet attachment

Installation Guide

WARNINGS REGARDING PROPER LOCATION FOR INSTALLATION

WARNING! DO NOT use the unit in explosive environments or in areas where flammable gas leakage may occur.

WARNING! DO NOT use the unit in areas where it will be exposed to rain or water.

WARNING! DO NOT use the unit in a corrosive atmosphere.

WARNING! DO NOT use the unit above 113°F (45°C)

Moving the Unit

Unlock the casters and push the unit using the side handles to a flat, level surface and set the cater brakes to the locked position.

Plugging in the Unit

Check the prongs and surface of the power cord plug for dust/dirt. If dust and/or dirt are present, wipe off with a clean, dry cloth.

Check the power cord, plug, and prongs for damage or excess play.

If any damage or excess play is found, contact a qualified repair technician or a qualified electrician to perform replacement of repair of the power cord, plug, or prongs.

WARNING! If the power cord or plug are damaged, repair should only be performed by qualified electrical personnel.

WARNING! DO NOT connect / disconnect the power cord or attempt to operate buttons with wet hands. This could result in electrical shock.

NOTE: Make sure the AC outlet is free of dirt, dust, oil, water, or any other foreign material.

The unit is equipped with an approved NEMA plug configuration (XC-14A = 5-15P; XC-22A = 6-15P; XC-30A = 6-20P). The appropriate outlet must be used for each plug type.

Operation

Control Panel

Control Panel

1. POWER BUTTON
   - Activates unit when POWER BUTTON is pressed.
   - Fan starts on low speed.
   - If POWER BUTTON is pressed during operation, unit stops.
2. BLOWER BUTTON
   - Changes fan speed from LOW to HIGH when pressed.
3. SPOT / COOL BUTTON
   - Activates compressor and begins producing cool air 2 minutes after button is pressed.
   - Regulates temperature based on outlet cool air temperature.
4. ROOM / COOL BUTTON
   - Activates compressor and produces cool air 2 minutes after button is pressed.
   - Regulates temperature based on inlet ambient air temperature.
5. SET TEMP BUTTON
   - Change target temperature / data value by ± 1.
   - Change data value by ± 10 by pressing continually.
   - Press the SET TEMP BUTTONS to set temperature
   - Upper button is to heighten temperature and Lower button is to lower temperature.
6. ALARM
   - Alarm indicator light blinks and indicates abnormal system operation.
   - If Alarm occurs, compressor stops.
   - System operation stops when ALARM light is activated / blinking longer than 3 minutes.
7. CURRENT TEMP
   - Displays current room temperature in display in Fahrenheit (in ROOM COOL MODE only)
   - SPOT / COOL Mode displays outlet (cool air) temperature during normal operations.
   - In order to change °F to °C, press SPOT / COOL and ROOM / COOL buttons together for 2 seconds.

- C will blink 2 times and the figure will change to °C
- ALARM codes blink and are displayed when abnormal operation occurs.

8. TARGET TEMP
   - Displays the unit set temperature for ROOM COOL mode only

Maintenance

Filter Cleaning

There are two filters in the unit. The evaporator filter is located at the front of the unit. The condenser filter is located in the rear of the unit.

Pull the filter frame forward to remove the back filter.

Removing Rear Filter

Remove dust from the filter using a vacuum cleaner hose attachment.

If required, was the filter in lukewarm water with a mild detergent. Leave to dry in a shaded area before reinstalling.

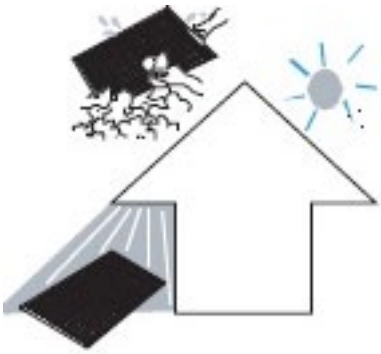

Cleaning the Filter

1. To clean the evaporator filter, pull the front filter guard forward from the top until the guard is open (in an angled position) and resting on the supporting cables.
2. Slide the filter up and use a vacuum cleaner to remove the dust from the filter.
3. If the filter is heavily covered with dust and dirt, warm water and mild soap or neutral detergent may be used to wash the filter. Do not use any other chemicals to clean the filter, as they will likely damage the filter.
4. Dry the filter in a shaded area before replacing it. Do not operate the unit without the filter installed and the filter guard in the closed position.

5. Replace the clean filter and close the filter guard.
6. To clean the condenser filter, lift up on the rear filter from the middle bar slightly and then angle the filter outwards from the bottom and remove.
7. Use the same cleaning procedure as in steps 3-5 above.
8. To replace the condenser filter, place the top of the filter in the guide and slide the filter up until the bottom of the filter clears the frame. Then push the bottom of the filter into the guide and let the filter gently fall inside the guide.

NOTE: For effective cooling, clean the filter at least every 2 weeks.

WARNING! DO NOT operate without the filter installed.

WARNING! DO NOT operate the unit with a damaged cord or plug, after the unit malfunctions, or if the unit has been dropped or damaged.

Spring Replacement

There are two springs on the rear of the condenser water tank guide.

1. Release the screw on the spring hook.
2. Take off the spring hook, and then pull out the opposite spring hook from the hole in the condenser water tank guide.
3. Replace with a new spring in reverse order.
4. Repeat these steps for the other spring.

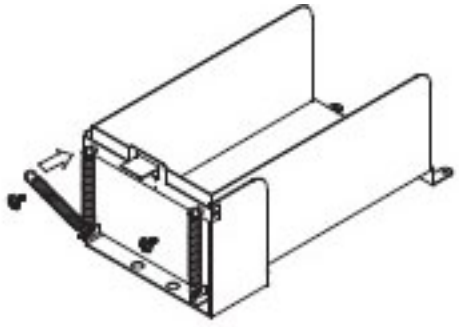

Spring Replacement

Troubleshooting

The alarm light is activated if abnormal operation occurs, and a code is displayed on the control panel. The compressor and condenser fan motor will stop operating. The evaporator fan will continue to run for 3 minutes. If the fault is rectified within 3 minutes, the unit will resume operation. If the fault persists for more than 3 minutes, the evaporator fan also stops. The fault must be rectified before the unit can resume normal operation.

Alarm Codes

Self-Diagnostic Alarm Codes			
Alarm Display	**Problem**	**Cause**	**Corrective Action**
	Frost prevention sensor and Abnormal temperature sensor value	a. Indoor heat exchanger temperature too low b. TH3 temperature sensor has a loose or broken connection	a. Do not use the air conditioner if ambient temperature is lower than 64°F (18°C) b. Contact a qualified service agent
	Refrigerant high pressure switch	a. Blocked air filter b. Blocked / kinked exhaust duct c. Ambient temperature is too high	a. Clean air filter b. Ensure exhaust duct is not blocked / kinked c. Do not use the air conditioner if ambient temperature is higher than 113°F (45°C)
	Abnormal temperature sensor value	TH1 temperature sensor has a loose or broken connection	Contact a qualified service agent
	Abnormal temperature sensor value	TH2 temperature sensor has a loose or broken connection	Contact a qualified service agent
	Compressor overloaded	a. Ambient temperature is too high b. Unstable voltage supply c. Defective compressor	a. Do not use the air conditioner if ambient temperature is higher than 113°F (45°C) b. Contact a qualified service agent c. Replace compressor
	Condensate water level alarm	Condensate tank is full	a. Empty the water tank b. After installation of the water tank, press the SPOT / COOL or ROOM / COOL button to resume operation

Troubleshooting Chart

Symptom	Possible Causes	Corrective Action
Water leakage	High water level in condensate tank	1. Remove blockage from drain hose 2. Remove any object stuck underneath of the black panel under the water tank
The unit doesn't work	1. Check the utility to verify that power is available to the unit 2. Verify that the power cord is connected	1. Reset the circuit breaker and restart the unit 2. Connect the power cord
No cold air flows from the cold air outlet	1. Ambient air cannot be properly cooled if the filter is dirty and not regularly cleaned 2. Only the fan operates for 2 minutes after the unit has been started to protect the unit 3. The ambient air temperature may be too high	1. Clean air filter 2. Verify that 2 minutes have passed since the unit was turned on 3. The temperature of the compressor can be higher when the ambient temperature is too high. The compressor will not work unless the ambient air temperature is within the acceptable operating range of the unit
Water flow can be heard after compressor shuts off	No cause	Common to hear coolant flowing after unit shuts off
Alarm displays "FT" with less than half of the condensate water in the tank	Spring is possibly broken	Replace the spring (see Maintenance section)

Specifications

MODEL NUMBER		XC-14A	XC-22A	XC-30A
COOLING	Cooling capacity	13,200 BTU/H	21,000 BTU/H	29,000 BTU/H
	Air flow (high/low) evaporator	375/285CFM	464/393CFM	571/500 CFM
	Air flow condenser	610CFM	857CFM	1142CFM
	Refrigerant	R410A, 15.9oz	R410A, 42.3oz	R410A, 39.9oz
	Free protection control	Cycles the compressor off preventing unit damage if coil freezes		
ELECTRICAL	Power supply voltage	115V	208/230V	
	Power supply frequency	60Hz	60Hz	60Hz
	Current consumption	11.5A	11.0/10.0A	15.0/14.0A
	Circuit breaker size	15A	15A	20A
	Power consumption	1.4kW	2.3kW	3.1kW
	Compressor input	1.2kW	2.0kW	2.4kW
	Motor (high/low) evaporator	0.091/0.089kW	0.24/0.20kW	0.13/0.11kW
	Motor input condenser	0.08kW	0.26kW	0.24kW
	NEMA plug	5–15P	6–15P	6–20P
	Power cord gauge	12AWG	14AWG	12AWG
	Power cord length	10 ft	10 ft	10 ft
	Automatic restart	Unit automatically restarts when power is reapplied after outage		
PHYSICAL	Dimensions (W x D x H)	17.5 x 19.9 x 43.3 in	22.0 x 24.4 x 50.4 in	
	Weight	132 lbs	198 lbs	208 lbs
	Air filter	Aluminum	Aluminum/vinyl chloride	
	Operating conditions	64–113°F	64–113°F	64–113°F
	Hot air duct diameter	12 in	16 in	16 in
	Maximum duct length	30 ft	30 ft	30 ft
	Condensate tank capacity	3 gal	3 gal	3 gal
	Multiple application accessories	Ducting and hose options, condensate pump kits, remote control panel, ceiling tile kits		
APPROVALS		UL 484		
WARRANTY		1 year warranty (USA and Canada)		

Shipping List

1. (1) PORTABLE COOLING UNIT
2. (1) User's and Installation Manual
3. (1) POWER CORD HOLDER
4. (4) RUBBER STOPPERS
5. DISCHARGE / SUPPLY AIR DUCTS
   A. (1) XC-14A
   B. (2) XC-22A
   C. (3) XC-30A

Options

Ambient Air Adaptor
Cooling Hose Assembly
Temperature Sensor Line
Remote Control
Pump Kit

Obtaining Service

If the UPS requires Service:

1. Use the TROUBLESHOOTING section in this manual to eliminate obvious causes.
2. Verify there are no circuit breakers tripped.
3. Call your dealer for assistance. If you cannot reach your dealer, or if they cannot resolve the problem, call Xtreme Power Conversion Corp Technical Support at 800.582.4524. Technical support inquiries can also be made at support@xpcc.com. Please have the following information available BEFORE calling the Technical Support Department:
   - Your name and address.
   - The serial number of the unit.
   - Where and when the unit was purchased.
   - All of the model information about your UPS.
   - Any information on the failure, including LED's that may or may not be illuminated.
   - A description of the protected equipment, including model numbers if possible.
   - A technician will ask you for the above information and, if possible, help solve your problem over the phone. In the event that the unit requires factory service, the technician will issue you a Return Material Authorization number (RMA).

If you are returning the UPS to Xtreme Power for service, please follow these procedures:

1. Pack the UPS in its original packaging. If the original packaging is no longer available, as the Technical Support Technician about obtaining a replacement set of packaging material. It is important to pack the UPS properly in order to avoid damage in transit. Never use Styrofoam beads for a packing material.
2. Include a letter with your name, address, daytime phone number, RMA number, a copy of your original sales receipt, and a brief description of the problem.
3. Mark the RMA number on the outside of all packages. Xtreme Power cannot accept any package without the RMA number marked on the outside of the boxes.
4. Return the UPS by insured, prepaid carrier to the address provided by the Technician.
5. Refer to the Warranty statements in this manual for additional details on what is covered.

Xtreme Power Conversion Limited Warranty

Xtreme Power Conversion (XPC) Corporation warrants Xtreme Power Conversion equipment, when properly applied and operated within specified conditions, against faulty materials or workmanship (excluding batteries) for a period of **one year for Xtreme Cooling unit** from the date of purchase. For equipment sites within the United States and Canada, this warranty covers repair or replacement, at the sole discretion of XPC Corporation. The customer is responsible for the costs of shipping the defective product to XPC Corporation. XPC Corporation will pay for ground shipment of the repaired or replacement product. This warranty applies only to the original purchaser.

If equipment provided by XPC Corporation is found to be **Dead-on-Arrival (DOA)**, XPC Corporation will be responsible for the costs of shipping product to and returning equipment from the customer in a timely manner as agreed to with the customer, once the customer has requested and received a **Return Material Authorization (RMA)** number. DOA equipment is defined as equipment that does not properly function according to user documentation when initially received and connected in conjunction with proper procedures as shown in the user documentation or via support provided by XPC Corporation personnel or authorized agents.

This warranty shall be void if (a) the equipment is repaired or modified by anyone other than XPC Corporation or a XPC Corporation approved third party; (b) the equipment is damaged by the customer, is improperly used or stored, is subjected to an adverse operating environment, or is operated outside the limits of its electrical specifications; or (c) the equipment has been used or stored in a manner contrary to the equipment's operating manual, intended use or other written instructions. Any technical advice furnished by XPC Corporation or a XPC Corporation authorized representative before or after delivery with regard to the use or application of Xtreme Power Conversion equipment is furnished on the basis that it represents XPC Corporations best judgment under the situation and circumstances, but it is used at the recipient's sole risk.

EXCEPT AS STATED ABOVE, XPC Corporation DISCLAIMS ALL WARRANTIES, EXPRESSED OR IMPLIED, INCLUDING WARRANTIES OF MERCHANTABILITY AND FITNESS FOR A PARTICULAR PURPOSE.

EXCEPT AS STATED ABOVE, IN NO EVENT WILL XPC Corporation BE LIABLE FOR DIRECT, INDIRECT, SPECIAL, INCIDENTAL, OR CONSEQUENTIAL DAMAGES ARISING OUT OF THE USE OF Xtreme Power Conversion EQUIPMENT, including but not limited to, any costs, lost profits or revenue, loss of equipment, loss of use of equipment, loss of software, loss of data, cost of substitutes, or claims by third parties. Purchaser's sole and exclusive remedy for breach of any warranty, expressed or implied, concerning Xtreme Power Conversion equipment, and the only obligation of XPC Corporation under this warranty, shall be the repair or replacement of defective equipment, components, or parts; or, at XPC Corporations sole discretion, refund of the purchase price or substitution of an equivalent replacement product.